PROP_PangA_DS

by ALEXANDRA PANG

Submission date: 16-Apr-2018 10:27PM (UTC+0100)
Submission ID: 86654878
File name: 97405_ALEXANDRA_PANG_PROP_PangA_DS_442689_1815719619.pdf
Word count: 3756
Character count: 22202

Birkbeck, University of London
Department of Computer Science and Information Systems

Happiness in the B&B industry: geo-referencing as a connector between user reviews and urban environment data

MSc thesis proposal

Alexandra Pang
MSc Data Science

April 2018

Contents

1. Introduction 3

2. Literature review and related works 3
   2.1. Analysis of the Airbnb industry 3
   2.2. Measuring the attractiveness of cities 4
   2.3. Sentiment analysis methodologies and applications in social science 4

3. Project Proposal 5

4. Data Sources 6
   4.1. insideairbnb.com 6
   4.2. Ordnance Survey 7
   4.3. London Ward Well-Being Scores 8

5. Proposed methodology and project plan 8
   5.1. Data pre-processing and exploration (June) 8
   5.2. Sentiment analysis and classification of Airbnb reviews (July) 9
   5.3. Estimating attractiveness of a ward (July-August) 9
   5.4. Modelling a relationship between Airbnb reviews and ward “attractiveness” (August) 9

6. Conclusion 9

Bibliography 10

1. Introduction

Advances in data science techniques and the exponential growth of the internet as a platform for users to share their views, has consequently enabled the growth of "computational social science", Lazer et. al (2009), cited in Foote (2017). Subsequently, research in sentiment analysis and other text analysis methods within the area of social media, has been one of the fastest growing areas of research as social scientists try to tap into the wealth of information now available to them.

For my thesis, I will use qualitative reviews and quantitative data generated by users of the online, peer-to-peer, short term rental platform *Airbnb*. The primary objective is to understand if overall Airbnb adoption and opinions reflect the "attractiveness" of a location and how this could influence policymakers and urban development. I will focus on listings in the Greater London area: due to vast differences in socio-economic factors between neighbouring districts, this should yield more interesting and conclusive results. I hope that a follow up to my work will lead to a generalisation of the Data Science model.

My studies in Data Science should help to understand this by creating new measures and concepts thanks to availability of different and unrelated data sources:

- Airbnb
- Ordnance Survey Points of Interest
- Ordnance Survey OpenDataTM Boundary-Line
- London Datastore Well-Being Scores

I will look to explore the following questions: How can statistical methods and data analysis techniques help in understanding the subtle inference of location on user perception? What software tools and algorithms need to be deployed? How can visualisation assist with drawing insightful conclusions? I am convinced that this type of analysis is challenging and ultimately useful, and therefore answering these questions will make up the core of my work.

2. Literature review and related works

This section will discuss articles relevant to the following areas of research: The Airbnb industry, measuring attractiveness of places, and methods of sentiment analysis and its use in social sciences. As a preliminary step, I will evaluate their methodologies, strengths and weaknesses, as well as how they can be built upon in this project. Any insights gained for consideration in this project will also be noted.

2.1. Analysis of the Airbnb industry

There are numerous research papers on the growth of peer to peer, sharing economy platforms, and more specifically that of Airbnb. There are two articles which have been identified as being most relevant to this thesis proposal.

Firstly, Ke (2017), provides a whole-of-market analysis of Airbnb and how the platform is used globally. Included in this paper is a brief analysis of the qualitative reviews – using a dictionary of 14,000 words, each word in the review is given a valence score and the overall ratio of positive to negative words is determined. Depending on the ratio, the review is classified as being positive or negative (other methods of sentiment analysis are detailed in **Section 2.3.**). Ke's overall conclusion is that there is a skew towards positive reviews – whilst this may be true, analysis of the review sentiment is done at a very high level – there has been no further work to identify if there are nuances between cities or countries, nor what this says about those respective cities or countries. This is a key weakness and there is likely a loss of valuable information. My thesis will look to overcome this issue by conducting analysis on a neighbourhood by neighbourhood level, allowing for more relevant comparisons to be made.

Quattrone et. al (2016) focuses on listings in Greater London and considers the question, "Who benefits from the "Sharing" Economy of Airbnb?". Its primary objective is to provide recommendations on regulating the sharing economy by analysing large sets of data that are better equipped to respond to real-time demands (Quattrone et.

al, 2016). Whilst the objectives of Quattrone's paper are different to those of this research proposal, there are aspects of the methodology which bear similarities. This includes the classification of data by London wards and the general summary statistics produced for the Airbnb market in Greater London. They also make use of socio-economic data and a measures of "attractiveness", which I will go on to discuss further in **Section 2.2**.

2.2. Measuring the attractiveness of cities

Attractiveness is defined as "The quality of being pleasing or appealing to the sense" and "The possession of qualities or features that arouse interest" (Oxford Dictionary, 2018). In the context of a city, this could be interpreted as aesthetic beauty, the amenities that are available, or the general sense of well-being that an area portrays. As such there have been different approaches to examining the attractiveness of cities, and relevant to this project, how user generated content can be studied to understand how perceptions are reflective of such attractiveness.

In "Using deep learning to quantify the beauty of outdoor places", Seresinhe et al. (2017) used an online game to gather ratings of over 200,000 images of Great Britain. Using neural networks they were able to determine what features were more commonly considered as being "scenic" or "beautiful". Elsewhere, Quercia et al. (2013), cited in Venerandi et al. (2016), examines the relationship between the happiness of a place and a persons visual perception of that place. Twitter is another powerful source of data for such analysis owing to the geo-located nature of Tweets: Schwartz (2013) exploited this fact to understand how well-being varied amongst geographies.

Quattrone et al. (2016) uses both census data and data from location based social network Foursquare to estimate attractiveness. Their methodology is to calculate the total number of attractions in a specified category (e.g. Food and Drink) per ward and then to normalise this by the size of that ward. This method has limitations as it does not consider the number of attractions in one ward relative to another, however, this can be addressed by using a measure known as an "Offering Advantage" as described by Venerandi et al. (2016) and Venerandi et al. (2015). An Offering Advantage extends upon the well known economics principle of Revealed Comparative Advantage (RCA). It measures to what extent a specified neighbourhood has more points of interest for a certain category (e.g. Food and Drink) than for the average of the city that neighbourhood forms a part of. This measure makes sense intuitively, and has been shown to be effective in further studies Quercia et al., (2014), cited in Venerandi et al. (2015). This project will look to implement this when measuring attractiveness of London wards.

2.3. Sentiment analysis methodologies and applications in social science

Liu (2012), defines sentiment analysis as a field of study which "analyses people's opinion, sentiments, evaluations, appraisals, attitudes and emotions towards entities such as products, services, organisations, individuals, issues, events, topics and their attributes". According to Mantyla et al. (2018), sentiment analysis has been one of the fastest growing research fields, with most recent research papers focusing on its applications within social media. The increase in use of social media, online review platforms, and blogging communities, has provided a wealth of unstructured, qualitative data containing valuable information on people's opinions towards a particular subject. The applications of text analysis techniques are valuable across numerous fields of research including that of social sciences. For example, in Beigi et. al (2016), sentiment analysis is used to improve disaster recovery and crisis management by analysing social media posts during the occurrence of natural disasters. Tumasjan et al. (2010) and Chen et al. (2010) , both cited in (Liu, 2012), used sentiment analysis of Twitter data to predict election results and study political standpoints respectively.

Many of the articles reviewed in this area focused on different sentiment analysis techniques and methods. There are more complex supervised learning methods, however, due to the nature of the data available for this thesis (we do not have a training set with pre-defined classifications), these were not investigated further. Instead, unsupervised learning methods were researched.

2.3.1. SentiStrength

Thelwall et al. (2012) discusses the use of a lexicon-based classifier called SentiStrength which gives a piece of text both a positive and negative sentiment score. According to the results of this paper, the machine learning approach of the SentiStrength package is a better performer than the unsupervised method. Given that an unsupervised approach is required for this research, this potential solution is deemed inappropriate.

2.3.2. Other methodologies

Turney (2002) estimates the semantic orientation for each phrase in a review, which is used to calculate the average semantic orientation for that review as a whole in order to give a final classification. This type of analysis could be done using Python libraries such as the Natural Language Tool Kit (NLTK), or TextBlob as evidenced by Sahni et al. (2017). This type of approach will be considered in this research.

3. Project Proposal

The primary objective of this research is to produce analysis that will help to understand how Airbnb reviews and adoption are related to the overall attractiveness of London wards. The results could be used to inform urban development for residential and tourism purposes and may help Airbnb hosts to improve their listings potential on the platform. To achieve this overall objective, the following subtasks will be performed:

1. An analysis and visualisation of the Airbnb adoption and market place for Greater London wards.
2. Classification of Airbnb reviews as being positive or negative using unsupervised sentiment analysis. This will include visualisation of the results through sentiment maps. If time permits, topic analysis may also be performed.
3. Determination of suitable metrics for estimating attractiveness of a neighbourhood using census data and Ordinance Survey Points of Interest.
4. Establishment of an appropriate model that identifies the relationship between Airbnb reviews with the overall attractiveness of a London ward.
5. Provide recommendations as to how the results could be used for urban planning.

The tools for implementation are Python and SQL for the data preparation phase, and Python and R for the analysis and visualisation phases. In particular, in order to implement the data flow planned in *Figure 1.,* I anticipate the use of the following Python libraries: Pandas, GeoPandas and TextBlob.

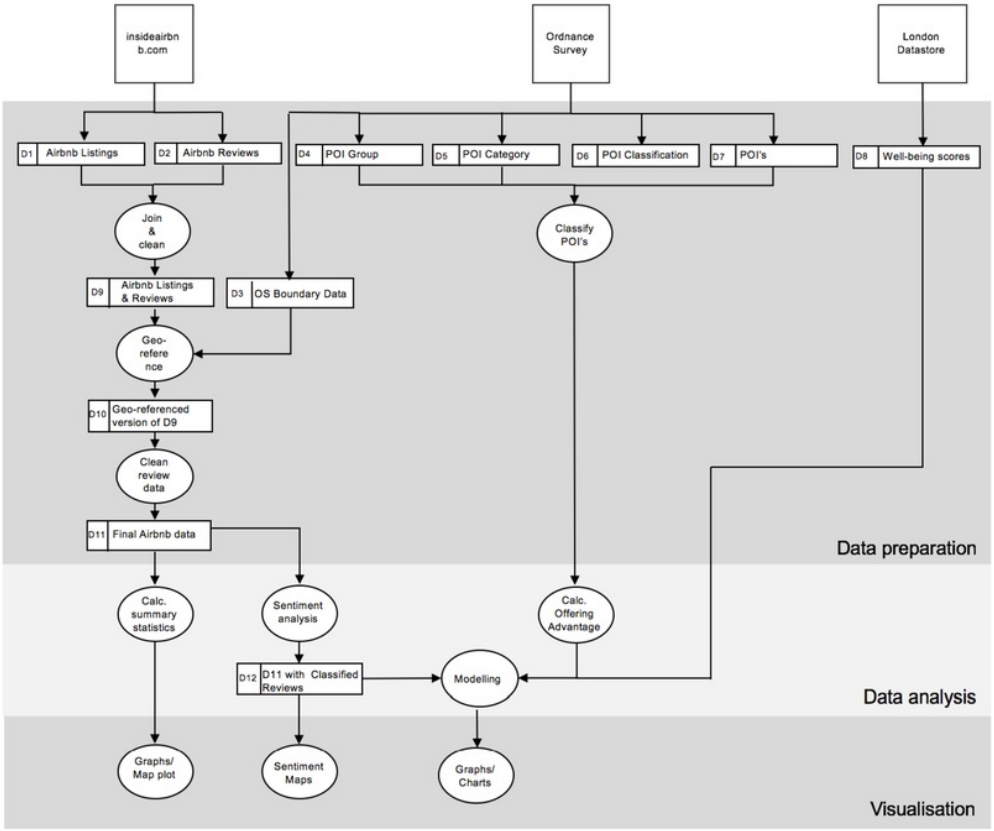

***Figure 1**: High level schema for the data flow for this thesis. External sources include insideairbnb.com, Ordnance Survey and London Datastore, which are outlined in more detail in Section 4..*

4. Data Sources

For the purpose of this research four sources of data, and a variety of data structures, will be used to demonstrate different data science skills used to process and prepare the data for analysis.

4.1. insideairbnb.com

Inside Airbnb (n.d.) is an independent organisation that collects publically available information about Airbnb listings from the official Airbnb booking website for selected cities globally. Whilst the website produces user-friendly visualisations of the data, the data is also made available for download in CSV format and is aggregated according to city. Each city has the following data files: 'Listings', 'Reviews' and Calendar.

'Listings':

A highly comprehensive data set covering all Airbnb listings for the Greater London area. Each listing has a total of 95 data points which give granular information on location, host details, accommodation type, accommodation features, price and overall quantitative ratings for several factors which are allocated a score in the range of 1 (the lowest) to 10 (the highest). Quantitative ratings are not available on a review by review basis.

'Reviews':

This data set consists of all qualitative, written reviews that have been given for a particular listing and include the date of the review.

Calendar:

Provides availability of listings to allow calculation of occupancy and demand. However, this will not be used as part of this research as there are various reports questioning the reliability of this data (including in Ke (2017)). It is not possible to differentiate between an actual booking and when a host has made a listing unavailable for alternative reasons.

The most recent data for the Greater London area was collected at 4 March 2017 and the earliest at 6 April 2015. Both of these data sets will be extracted, aggregated, and deduped in order to obtain the largest possible data set across the longest time period. The Listings and Reviews data will be joined, as illustrated in Figured 2.

Figure 2: *Illustration of how Listings and Reviews data will be joined and the associations between the 2 data sets.*

4.2. Ordnance Survey

4.2.1. Points of Interest

The Ordnance Survey (2017) classification scheme for the Points of Interest (POI) data was defined by PointX and has a 3-tier hierarchical structure: Group, Category, and Classification. *Figure 3.* shows how this works for a subset of data for illustrative purposes:

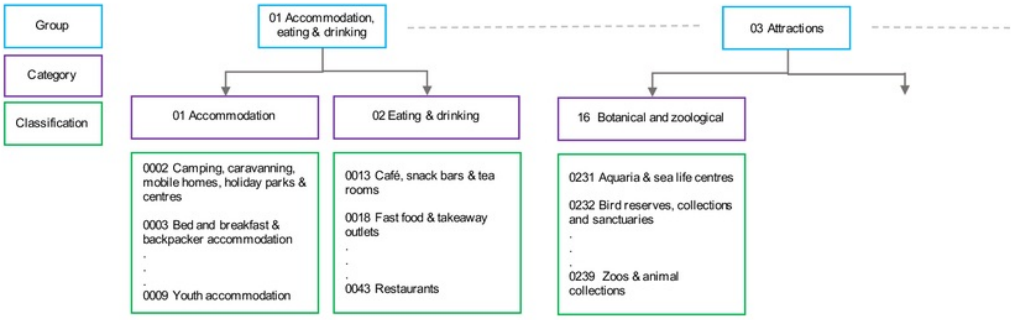

Figure 3: *High level overview of the 3-tier hierarchical structure for the Points of Interest classification scheme. This shows only a subset of the groups, categories and classifications available.*

Data is provided in 4 different files:

- Group: There are 10 groups.
- Category: There are 52 categories.
- Classification: There are 616 classes.
- Points of Interest: This contains all Points of Interest for London, including location.

Each POI has a PointX Classification Code which is an eight-digit number: the first two numbers correspond to the Group, the second two the Category and the last four the Class – these are also shown in *Figure 3*. In order to use this data, the PointX Classification Code will need to be split in to Group, Category and Class codes and then

the corresponding value looked up in the correct file listed above (as shown in *Figure 4.*). The location of the POI is also given – this will also be used as part of this project.

This data was last updated December 2017.

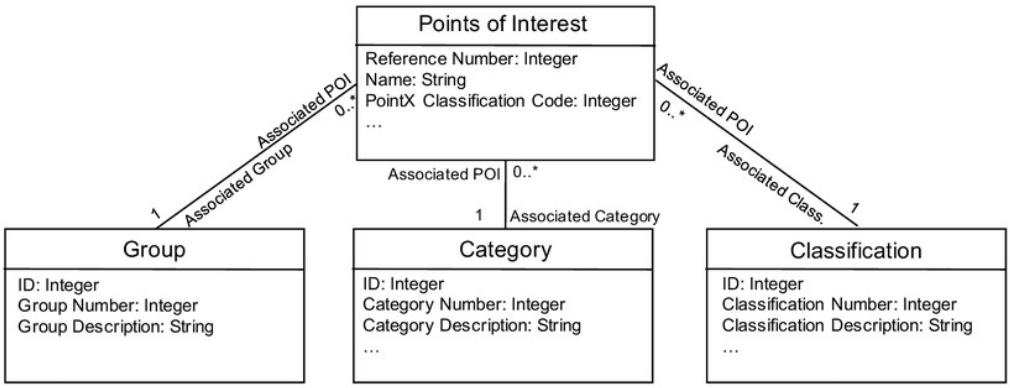

Figure 4: Illustration of how Points of Interest data will be mapped and the associations between the 4 data sets.

4.2.2. OS OpenData™ Boundary-Line

Boundary line coordinates provided by Ordnance Survey (2017) will be used to map the longitude and latitude points for each listing to its respective London ward for a more granular analysis of results.

This data was last updated October 2017.

4.3. London Ward Well-Being Scores

The London Datastore (2015) is an initiative by the Greater London Authority to make data for London freely and easily accessible by the public. One of the data sets includes an overall well-being score which is obtained by combining twelve key social indicators for each ward. These include indicators across the following categories: Health, Economic Security, Safety, Education, Children, Families, Transport and Environment. The data is designed to allow users to create custom scores by altering the importance of each indicator – for the purpose of this research, all indicators will have an equal weighting.

This data was last updated in 2013.

5. Proposed methodology and project plan

5.1. Data pre-processing and exploration (June)

Unlike the data from the London Datastore and Ordnance Survey, the data extracted from insideairbnb.com is noisier in nature and, as such, will require a greater degree of pre-processing before analysis. For example:

- Removal of all listings that do not have a quantitative rating/score (given the objective of this particular research it does not make sense to keep listings that do not have an accompanying review).
- Removal of all dimensions in the 'Listings' data that are not relevant or helpful in answering our research questions.
- Removal of reviews that are cancellations

The newly cleaned 'Listings' data set will be joined with the 'Reviews' data by the Listing ID (*Figure 2.)* to create a new data set comprising of all listings that have at least one qualitative review.

Pre-processing will also include mapping the longitude and latitude coordinates given for each listing to their respective borough using the OS OpenData™ Boundary-Line data. Analysis will be conducted at this stage to understand distribution of listings and key characteristics of Airbnb adoption; this will include visualisations where appropriate.

5.2. Sentiment analysis and classification of Airbnb reviews (July)

Before sentiment analysis is conducted, the Airbnb qualitative reviews will also go through pre-processing to cleanse and normalise the text.

The sentiment function in the the Python library, TextBlob, will be used to perform sentiment analysis. This returns two elements; polarity (on a scale of [-1,1]) and subjectivity (on a scale of [0,1]). Based on the outputs, reviews will be given an overall classification of: negative, somewhat negative, neutral, somewhat positive or positive. The classifications and polarity values will be used to create sentiment maps.

If time permits, topic analysis will also be conducted using Gensim, another Python library.

5.3. Estimating attractiveness of a ward (July-August)

The PointX Classification Code for each POI will be used to identify the corresponding Group, Category, and Classification (as outlined in *Figure 4.*) – the location of the POI will also be extracted from this data set in order to calculate the "Offering Advantage" per London ward. As in Venerandi et al. (2016 and 2015), correlation analysis may be performed in order to determine the most significant POIs related to attractiveness by assessing the correlation against the London wards well-being score.

5.4. Modelling a relationship between Airbnb reviews and ward "attractiveness" (August)

Multiple linear regression will be used to model the possible relationship between a user's perceptions of a ward and its attractiveness score, and also to assess which elements of attractiveness are likely to gain more positive reviews on the platform.

6. Conclusion

The popularity of online social media, blogs, and review platforms, has greatly enhanced the value and use of sentiment analysis within the field of social science research. Analysing qualitative reviews and location data, this thesis looks to draw upon such methods to understand the relationship between the former and the overall attractiveness of a location. Aside from its uses to inform policymakers, I believe the analysis involved to achieve this to be challenging and demonstrative of a range of learnt, and new, data science skills.

Bibliography

Airbnb, I. (n.d.). *Inside Airbnb. Adding data to the debate.* Retrieved 2018, from http://insideairbnb.com: http://insideairbnb.com

Beigi G., H. X. (2016). An Overview of Sentiment Analysis in Social Media and Its Applications in Disaster Relief. *Pedrycz W., Chen SM. (eds) Sentiment Analysis and Ontology Engineering. Studies in Computational Intelligence, 639*.

Boundary-Line. (2017). Retrieved March 2018, from Ordnance Survey: https://www.ordnancesurvey.co.uk/business-and-government/products/boundary-line.html

Dictionaries, O. (2018). Retrieved from Oxford Dictionaries: https://en.oxforddictionaries.com/definition/attractiveness

Foote, J. S. (2017). A Computational analysis of Social Media Scholarship. In A. M. Jean Burgess (Ed.), *The SAGE Handbook of Social Media* (pp. 111-34). London.

Greater London Authority. (2015). *London Ward Well-Being Scores*. Retrieved March 2018, from London Data Store: https://data.london.gov.uk/dataset/london-ward-well-being-scores

Guttentag, D. (2015). Airbnb: disruptive innovation adn the rise of an informal tourism accomodation sector. *Current Issues in Tourism, 18:12*, pp. 1192-1217.

Ke, Q. (2017). Sharing Means Renting?: An Entire-Marketplace Analysis of Airbnb. *In Proceedings of the 2017 ACM on Web Science Conference*, (pp. 131-139).

Liu, B. (2012). *Sentiment Analysis and Opnion Mining.* Morgan & Claypool Publishers.

Mantyla, M. G. (2018, February). The Evolution of Sentiment Analysis - A Review of Research Topics, Venues, and Top Cited Papers. *Computer Science Review, 27*, 16-32.

Quattrone, G. P. (2016). Who Benefits from the "Sharing" Economy of Airbnb. *Proceedings of the 25th International Conference on World Wide Web* (pp. 1385-1394). Montréal: International World Wide Web Conferences Steering Committee Republic and Canton of Geneva, Switzerland.

Quercia, D. (2013). Urban: crowdsourcing for the good of London. *The 22nd International Conference*, (pp. 591-592).

Quercia, D. a. (2014). Mining urban deprivation from Foursquare: implicit crowdsourcing of city land use. *IEEE Pervasive Computing, 13*(2), pp. 30-36.

Sahni, T. C. (2017). Efficient Twitter sentiment classification using subjective distant supervision. *2017 9th International Conference on Communication Systems and Networks* (pp. 548-553). Bangalore: IEEE.

Schwartz, H. E. (2013). Characterising geographic variation in welll-being using Tweets. *Seventh International AAAI Conference on Weblogs and Social Media* (pp. 583-591). Cambridge, MA: AAAI Publications.

Seresinhe, C. P. (2017, July). Using deep learning to quantify the eauty of outdoor places. *Royal Society Open Science, 4*.

Survey, O. (2017). *Points of Interest*. Retrieved March 2018

Thelwall, M. B. (2012). Sentiment Strength Detection for the Social Web. *Journal of the American Society for Information Science and Technology, 63*(1), 163-173.

Turney, P. (2002). Thumbs up or thumbs down? Semantic orientation applied to unsupervised classification of reviews. *40th Annual Meeting of the Association for Computational Linguistics (ACL)*, (pp. 417-424). Philidelphia.

Venerandi, A. Q. (2016). City form and well being: What makes London neighborhoods good places to live? *The 24th ACM SIGSPATIAL International Conference.*

Venerandi, A. Q.-T. (2015). Measuring urban deprivation from user generated content. *CSCW '15 Proceedings of the 18th ACM Conference on Computer Supported Cooperative Work & Social Computing* (pp. 254-264). Vancouver: ACM.